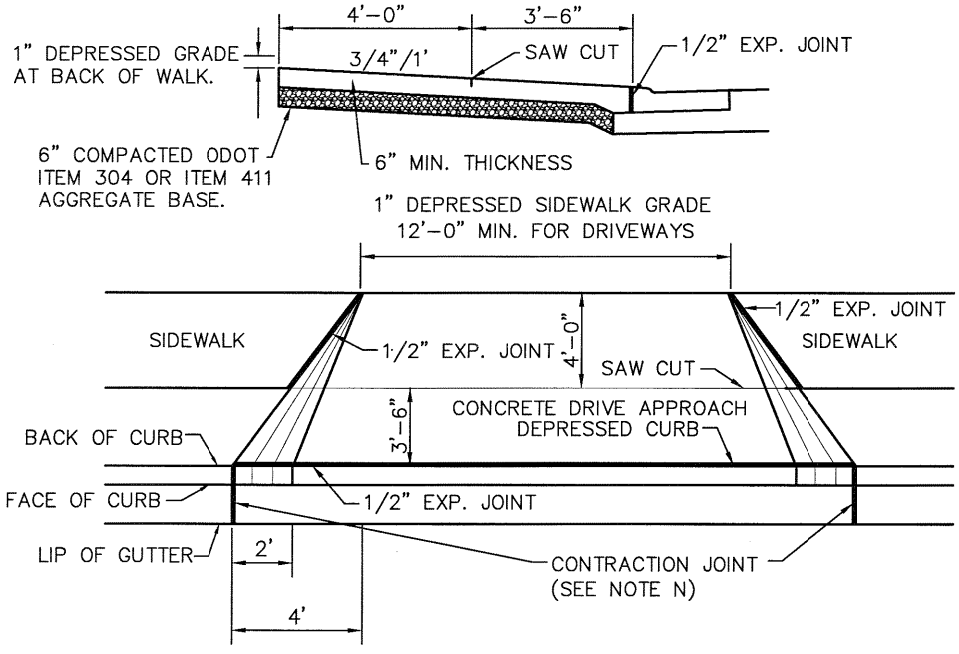

FOR LOCAL STREETS

3'-6" TREE LAWN

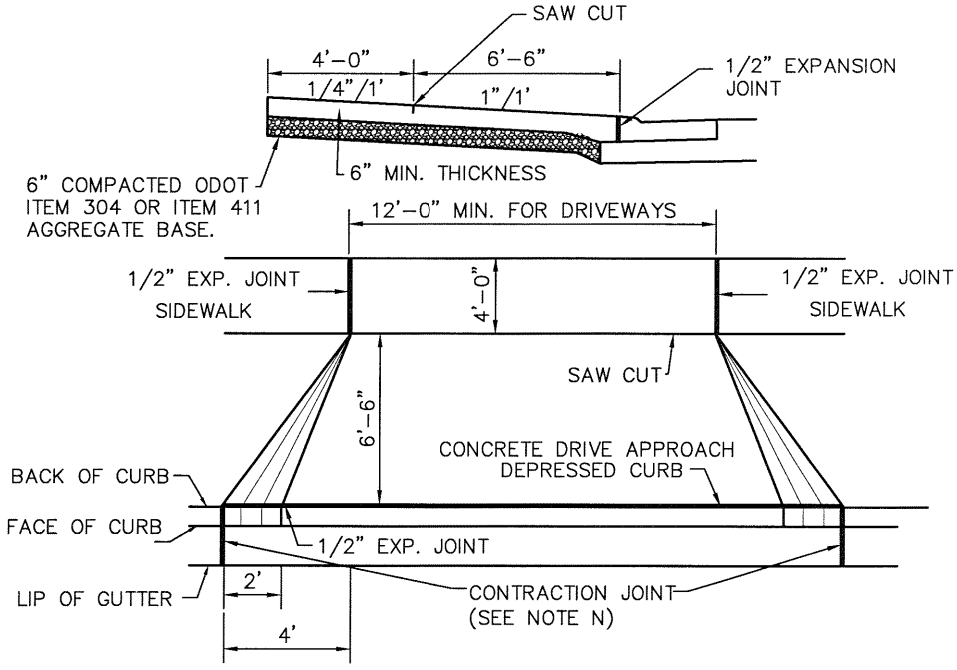

FOR COLLECTOR STREETS

6'-6" TREE LAWN

NOTES

A. DRIVE APPROACHES SHALL MEET THE REQUIREMENTS OF ODOT ITEM 452 AND 499 CAST-IN-PLACE CONCRETE.

B. DRIVE APPROACHES SHALL NOT BE POURED MONOLITHICLY WITH CURB.

C. MAXIMUM JOINT SPACING SHALL BE 10' LONGITUDINALLY, TRANSVERSELY AND AT TAPERS.

D. DRIVE APPROACHES SHALL BE KEYED AT ALL CONSTRUCTION JOINTS.

E. EXPANSION MATERIAL SHALL BE 1/2" PREMOLDED.

F. 6" OF COMPACTED ODOT ITEM 304 OR ITEM 411 AGGREGATE BASE SHALL BE PLACED UNDER DRIVE APPROACHES.

G. PROVIDE BROOM FINISH AND EDGING TO ALL EXPOSED SURFACES.

H. WHERE CURB AND GUTTER HAS NOT BEEN DROPPED AT DRIVE APPROACHES, THE CURB SHALL BE ENTIRELY REMOVED AND REPLACED AS DIRECTED BY THE VILLAGE.

I. WHERE ASPHALTIC CONCRETE PAVEMENT IS DISTURBED, THE ASPHALT SHALL BE REPLACED AS DIRECTED BY THE VILLAGE.

J. JOINTS SHALL BE CLEANED AND EDGED BY A 1/4" RADIUS EDGER. LONGITUDINAL JOINTS SHALL BE AS DIRECTED BY THE VILLAGE. EXPANSION JOINTS SHALL BE OF SUCH DIMENSIONS AS SHOWN ON STANDARD DRAWINGS FOR CONSTRUCTION JOINTS.

K. "W"=12' MINIMUM TO 24' MAXIMUM UNLESS OTHERWISE APPROVED BY THE VILLAGE.

L. CONCRETE SHALL BE ODOT CLASS C (4000 PSI, 600 LB/CY) CEMENT. PROPORTIONING OPTIONS 1, 2, & 3 NOT ALLOWED.

M. CONCRETE SHALL CONTAIN 6% ± 1% OF TOTAL AIR.

N. IF CURB IS REMOVED AND REPLACED DURING DRIVEWAY CONSTRUCTION, JOINTS BETWEEN EXISTING AND NEW CURB ARE TO BE 1/2" EXPANSION JOINTS.

O. ALL NEW CONSTRUCTION OR MODIFICATIONS OF DRIVE APPROACHES REQUIRE A CONCRETE OR ASPHALT APPROACH, REGARDLESS OF WHETHER THERE IS A SIDEWALK OR NOT. THE NEW APPROACH IS TO GO FROM EDGE OF EXISTING STREET TO RIGHT OF WAY OR A MINIMUM OF 6'-0".

P. DRAINAGE ISSUES WILL HAVE TO BE ADDRESSED, WHEN A DRIVEWAY IS INSTALLED OR MODIFIED.

Q. PRECAUTIONS SHALL BE TAKEN TO PROTECT EXISTING CONCRETE, BRICK, ETC. FROM TIRE MARKS AND DAMAGE DURING CONSTRUCTION.

VILLAGE OF ADA CHOICE ONE ENGINEERING	RESIDENTIAL DRIVE APPROACH	REVISIONS: JUNE 2006	DATE APPROVED: MAY 1997 PAGE No. 300-6